**LEPCOS (North-West Laboratory)**
http://ferrite.ru Tel/fax +7-812-369-11-54

| REVISIONS | | | | |
|---|---|---|---|---|
| REV | SYM | DRAFTER | CHECKER | DATE |
| 1 | | T.S.LII | W.H.HSU | 07/18/06 |
| 2 | | T.S.LII | W.H.HSU | 07/24/06 |
| 3 | | T.S.LII | W.H.HSU | 04/02/07 |

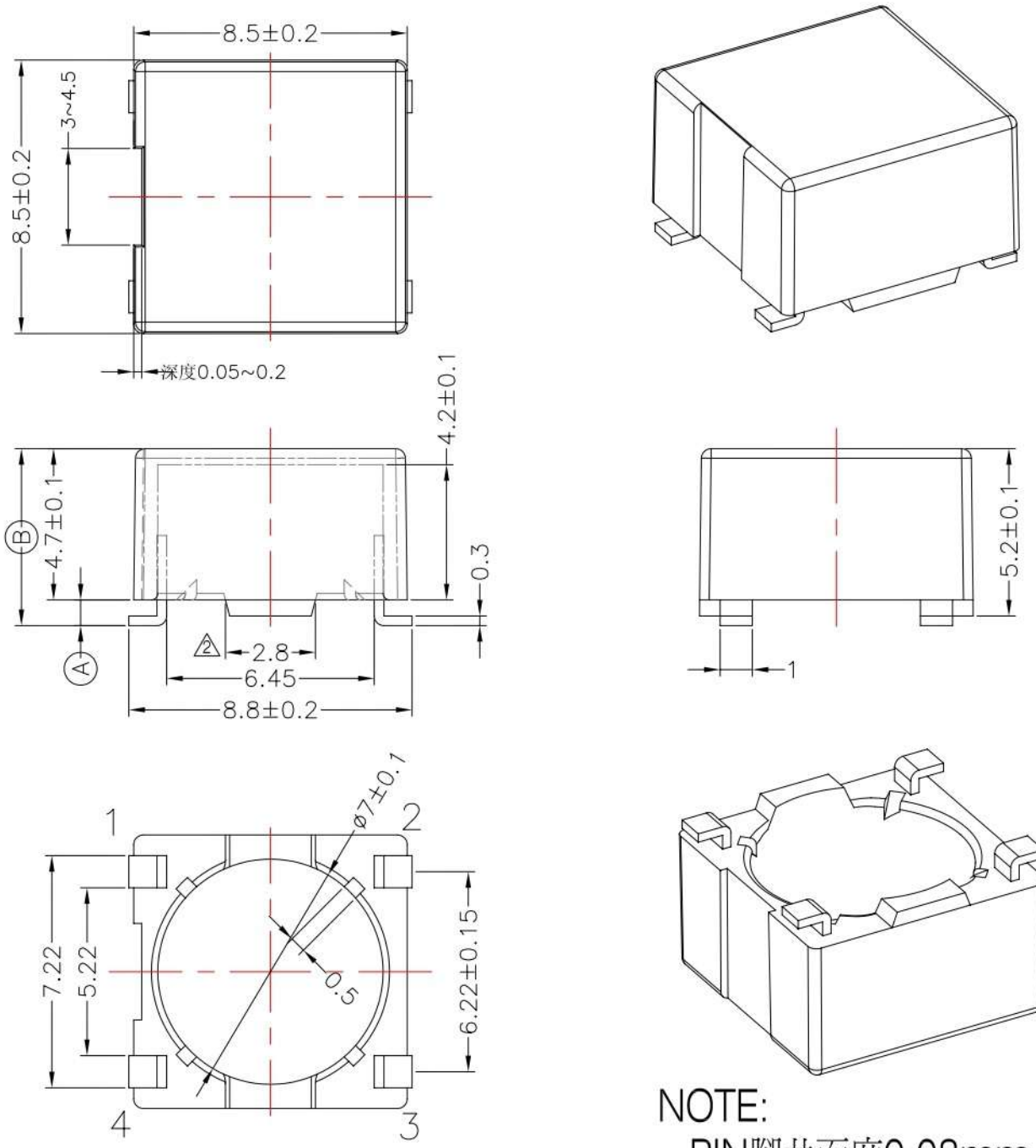


NOTE:
PIN脚共面度0.08mm Max

| DWG NO. | 633T-4P-L-6.22-A-1 | | | | |
|---|---|---|---|---|---|
| PART NO. | MATERIAL (BOBBIN) | MATERIAL (TERMINAL) | TERMINAL (PLATING) | PIN ALLOCATION | NOTE |
| TBI-113-34011.103 | PM-9630JT | P.B | Sn | ALL PIN (A)=0.8±0.1 (B)=5.5±0.15 | |
| TBI-113-34011.113 | PM-9630JT | P.B | Sn | ALL PIN (A)=1.1±0.1 (B)=5.8±0.15 | |
| | | | | | |
| | | | | | |
| | | | | | |
| | | | | | |

TOLERANCE: .X±0.15 .XX±0.10 .XXX±0.05 | UNIT : m / m | SCALE 5 : 1

Finish:
1. PB wire Immersion Sn on terminal : Thickness:Sn plating,100,5 μm (200 μ inches) min,Base nickel 0.625 μm (25 μ inches) min.
2. CP wire Immersion Sn on terminal : Thickness:Sn plating,100,5 μm (200 μ inches) min.
3. Coplanarity deviation: 0.10 mm (0.004 inches )max.

REV 3