Specifications 6025HSL 12VDC 60*60*25mm	
1．机构 Mechanical:	
1-1．外观尺寸 External dimension	60*60*25mm
1-2．重量 Weight	55g/spc
1-3．轴承 Bearing	含油轴承 oil bearing
2．电气特性 Electrical characteristics (在通风及额定电压条件下 in free air at rated voltage)	
2-1．额定电压 Rated voltage	12V
2-2．额定电流 Rated current	0.25±5%A
2-3．额定输入功率 Rated input power	3.0±5%W
3．效率 Efficiency	
3-1．风扇转数 Rated speed	5000RPM±10%
3-2．最大风量 Maximum air flow	29.35FM
3-3．最大静压 Maximum static air pressure	11.32mm-H2O
4．特性规格 Characteristics	
4-1．操作电压 Operating voltage range	12V
4-2．起动电压 Starting voltage	6V (ON/OFF)/
4-3．锁定电流 Locked current 4-4．操作温度 Operating temperature	0.25A (Reference) -30℃~+85℃
4-5．储存温度 Storage temperature	-30℃~+85℃
4-6．环境湿度 Environment humidity	10% (RH) 45℃ for24 hours & 98%(RH) 45℃ for24 hours
4-8．绝缘阻抗强度 Insulation resistance	在本体与两条导线间加 500V 直流电压之绝缘阻抗在 10MΩ 以上 At least 10MΩ at 500VDC between housing and both lead wires.
4-9．绝缘耐压强度 Dielectric strength	必须能抵抗在本体与两线间加 500V 交流电压 1 分钟 lmA。 Withstand 500 VAC 1 minute 1mA between housing and both lead wires.
4-10．预期寿命（MTBF）：指在额定电压及正常温度(25℃)，湿度条件下连续运转 Life expectance: continuous operation at rated voltage and normal temperature & humidity	
4-10-1 含油轴承预期寿命：20000 小时 Oil bearing life expectance:20000H	

2、产品图纸
PRODUCT DRAWING

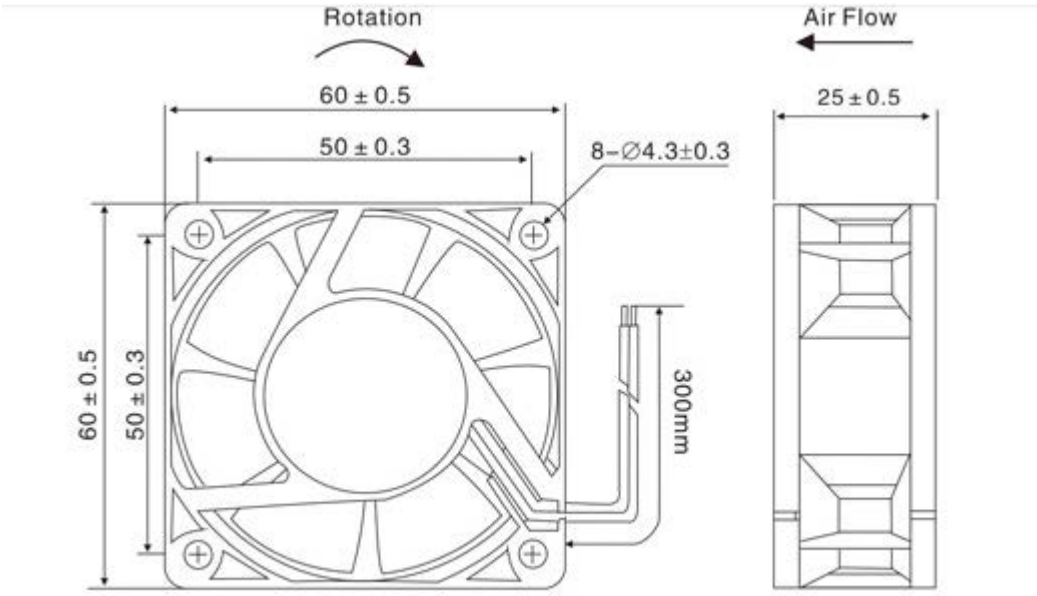

尺寸单位：毫米
DIMENSIONS UNIT:MM

规 格 说 明 书
Specifications

4-11 端子抗拉强度 Tensile strength of connector	端子以 1 公斤的拉力拉扯 15 秒不会脱落（无端） Connector will not be any broken at 1kg for 15seconds per piece.
4-12.噪音分贝 Acoustic sound level	43dBA (Max)

4-12-1.噪音测试说明 Acoustic sound level test descriptions
以额定电压在噪音实验室中测试（背景噪音 14.9 分贝以内）
At rated voltage in sound proofroom
Background noise:14.9dBA

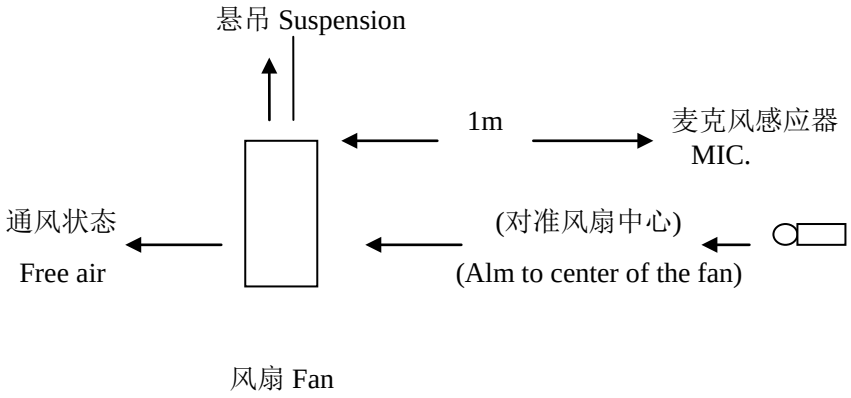

4-13. 特性定义 Characteristics

4-13-1. 额定电流 & 额定转速 & 额定操作功率，须在额定电压下；马达连续转 5 分钟达到规格下限，10 分钟达到正常值
Rated current, rated speed, and rated input power shall reach bottom line of specification after 5 minutes Continuous rotation at rated voltage and reach standard specification after 10 minutes continuous voltage.

6-13-2.起动电压是指突然通电后能够使风扇起动之最低电压
Starting voltage is the least voltage that enables to start the fan by sudden power on

5．保护功能 Protection

5-1．风扇旋转锁定测试，将风扇通电锁死测试至少 72 小时，当锁定解除之后均仍然正常运转
Lock test: Locked impeller for at least 72 hours at rated voltage. Fans work in normally after locked released.

5-2．后向电压测试：以电源电压作反向导电测试 5 分钟均不转动，再正向导电仍可正常转动
Reversal voltage test: We took 200Vpcs for reversal voltage test at power supply for 5 minutes and all remain still..Fans work normally after corrected voltage.

6．安全规格 Safety		CE	

规 格 说 明 书
Specifications

7. 原材料 Material

项次 Item	主要元件 Major components	材质或型式 Material & Specification	等级 Grade	CE 号码 CE No.	备注 Remark
7-1	支架 Fan housing	PBT		TH18FR-634S	
7-2	扇叶 Fan blade	PBT	94V-0		
7-3	轴心 Stator core	不锈钢 Stainless steel (SUS42012)			
7-4	轴承 Bearing	含油轴承 Oil-impregnated			
7-5	橡胶磁铁 Rubber magnet	铁锶粉末化合物 Strontium ferrite (BQB14W)			
7-6	矽钢片 Silicon steel strip	(H23) (H-8)			
7-7	漆包线 Enameled copper wires	去膜直径 0.04~0.20 Material & specification 0.04~0.20mm	MW-2 UEW		耐热 Heat resistance 120 ℃
7-8	印刷线路板 Printed CircuitBoard	单层印刷线路板 Wiring printed single layer board	94V-0		CAM-1 Tl0.8mm
7-9	电源线 Lead wires	聚乙烯氯化物包铜线 Polyvinyl Chloride enameled Copper wirer (AWG#26)	94V-0		红线：正极 黑线：负极 Red wire：+polarity Black wire:-polarity
7-10	贴纸 Label	多元脂 Polyester			
7-11	端子接头 Connector housing				

8. 出货检验程序 Product inspection procedure

本公司出货检验程序均依照下列步骤实施 Inspection procedures below are extremely followed.

8-1.100%生产线上电性;死角,扇叶拉拨.
100%Electric;rotating,dead spot,fan blade fasten, and primary noise test on production line.

8-2.100%生产线上以示波器作正常电流波形筛检
100% Current wave test with scope on production line.

8-3.100%以手敲击测试及静音室异音过滤
100% Strick test by hand and noise filter in quiet room.

8-4.10cm 落地试验依 MIL-STD-105E 作抽样
10cm drop test at random in accordance with MIL-STD-105E standard

8-5 出货抽样检验依 MIL-STD-105E 作允退判定
Random inspection in accordance with MIL-STD-105E standard.

8-6 允退标准如下 P
加严 Critical AQL:0.4　　正常 Major AQL:0.65　　宽松 Minor AQL:1.0

规 格 说 明 书
Specifications

9.转速侦测　RPM detection

9-1．转速侦测图

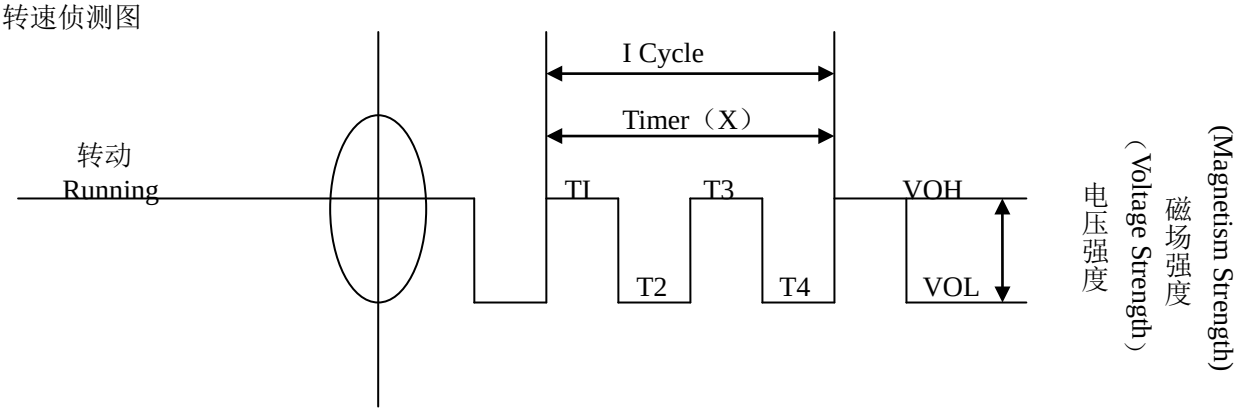

T=T1+T2+T3+T4

9-2．转速侦测说明

9-2-1．输出波形：方波
Output waveform: square wave.

9-2-2．当电压值愈高（Voltage Y 值），则输出波形愈高
When the voltage value is higher (Voltage Y)then output waveform is higher

9-2-3．当风扇不转，则输出波形为一水平线。
When the fan is shutdown then output waveform is a horizontal line

9-2-4．循环距离越长（Voltage Y 值），则转速越慢
The cyclic distance is longer then the RPM is slower.

9-2-5．转速计算公式如下：
RPM formula as follows:

$$RPM = \frac{60000}{X（ns）}$$

<例>Example
X=15
Ls=1000ns
Lmin=60000ns

$$RPM = \frac{60000}{15} = 4000$$

规 格 说 明 书
Specifications

10．注意事项（Notes）

10-1．使用时请勿超出本规格所规定之极限，否则我们不保证此产品。
We,HYX Co;LTD will not guarantee the products if the application of our products are exceeded the Limitation which is specified on the specification.

10-2．倘若要变更此份文件的任何规格，请务必事先提出要求
In case of changes of the specification specified on this document. A WRITTEN NOTICE IS REQUESTED IN ADVANCE。

10-3．请勿触压着叶片以及电源线缠绕着风扇或用力拉扯电源线，如此轴心与电源线将会被损坏
please do not touch the impeller with the pressure and never bring the fan with lead wire .The bearing and lead wire may be damaged.

10-4．本产品不保证因粉尘、水滴、小虫进入，而影响寿命与不良产生
No guarantee on the products against the safety problem or failure caused by powder dust, drop of water or Insect.

10-5．如有任何资料及文件与此份不同，将以此份资料为主要参考
If there is any data or related documentation different from this data sheet.This data sheet is the principle Reference

10-6．请勿在可燃性气体与任何有害环境中使用
Please do not use the fan in the environment of corrosive gas or liquid or any detrimental gas

10-7．请于六个月内使用，否则风扇存放在很高温或很低温及湿度很高的室温中，风扇于六个月后将可能会有漏电流产生。
Please do not store the fan in the environment of high/low temperature, high humidity or detrimental gas Please store within six months ,every six months , shall be a leakage of electric current to the fan even Though the fan is stored in room temperature.

10-8．当风扇于运转中，请勿企图将风扇锁死特别长的时间。如此，会因连续停止不转，产生高热而烧毁风扇
While the fan is in operation, please do not look the fan intentionally for a long period of time,since the Continuous stoppage will result in overheat and thus burnt out the fan.

10-9．组装风扇时，请特别注意，因共振或振动产生的噪音
During the installation of the fan , please pay substantial attention to possible notice caused by resonance Vibration and shock.

10-10．当搬运或作业中，风扇如从 60cm 的高度落下，将会对叶片的平衡产生若干影响，特别是滚珠轴承避免掉落。
It is very important to notify that avoid to drop from 60cm height when in any movement or operation, it Will impact the balance of balance of blade . Especially ball bearing structure is avoided to drop down.

10-11．锁外壳之螺丝扭力不得超 4kg/f.
The torque of the screw that locked the frame should not exceed4kg/f.