PRODUCT SPECIFICATION　9238HSL　AC220V　92mm*92mm*38mm

NO	检测项目 TEST ITEM		技术参数 SPECIFICATION/CONDITION
1	安规认证　SAFETY AGENCY'S APPROVAL		CE
2	尺寸　DIMENSION		92×92×38mm
3	额定电压　RATED VOLTAGE		230 VAC
4	工作电压范围　OPERATING VOLTAGE RANGE		220 VAC～240 VAC
5	启动电压　START-UP VOLTAGE		154 VAC
6	额定电流　RATED CURRENT (A)	50Hz	0.08-0.10A
		60Hz	0.06-0.08A
8	额定功率　RATED INPUT POWER (W)	50Hz	13W
		60Hz	11W
10	风量　AIR FLOW (CFM)	50Hz	27CFM
		60Hz	29CFM
12	风压　AIR PRESSURE (mmH_2O)	50Hz	4.7(mmH_2O)
		60Hz	4.9(mmH_2O)
14	转速　ROTATIONAL SPEED (R.P.M.)	50Hz	2400±10% (R.P.M.)
		60Hz	2500±10% (R.P.M.)
16	噪音　ACOUSTICAL NOISE (dB-A)	50Hz	33dB-A (42dBMAX)
		60Hz	35dB-A (43dBMAX)
18	绝缘阻抗　INSULATION RESISTANCE		500VDC ≥100MΩ
19	绝缘耐压　INSULATION & VOLTAGE RESISTANCE		1800VAC(50Hz) ≤0.5mA 3S
20	平均寿命 LIFE EXPECTANCE		在温度 25℃，相对湿度 15%～65%条件下平均寿命为 20，000 小时 20,000 HRS AT TEMP. 25℃ , 15%~65RH
21	工作温度　OPERATING TEMPERATURE		-10℃～+65℃
22	储存温度　STORAGE TEMPERATURE		-15℃～+70℃
23	重量　WEIGHT		340 g
24	马达保护　MOTOR PROTECTION		阻抗保护　IMPEDANCE PROTECTION
25	绝缘等级　INSULATION CLASS		CLASS B
26	轴承类型　BEARING SYSTEM		含油轴承
27	外框　FRAME		AL(ADC12)
28	定子与转子　STATOR&ROTOR		中钢　SILICON STEEL
29	扇叶　FAN BLADE		PBT 扇叶

2、产品图纸

PRODUCT DRAWING

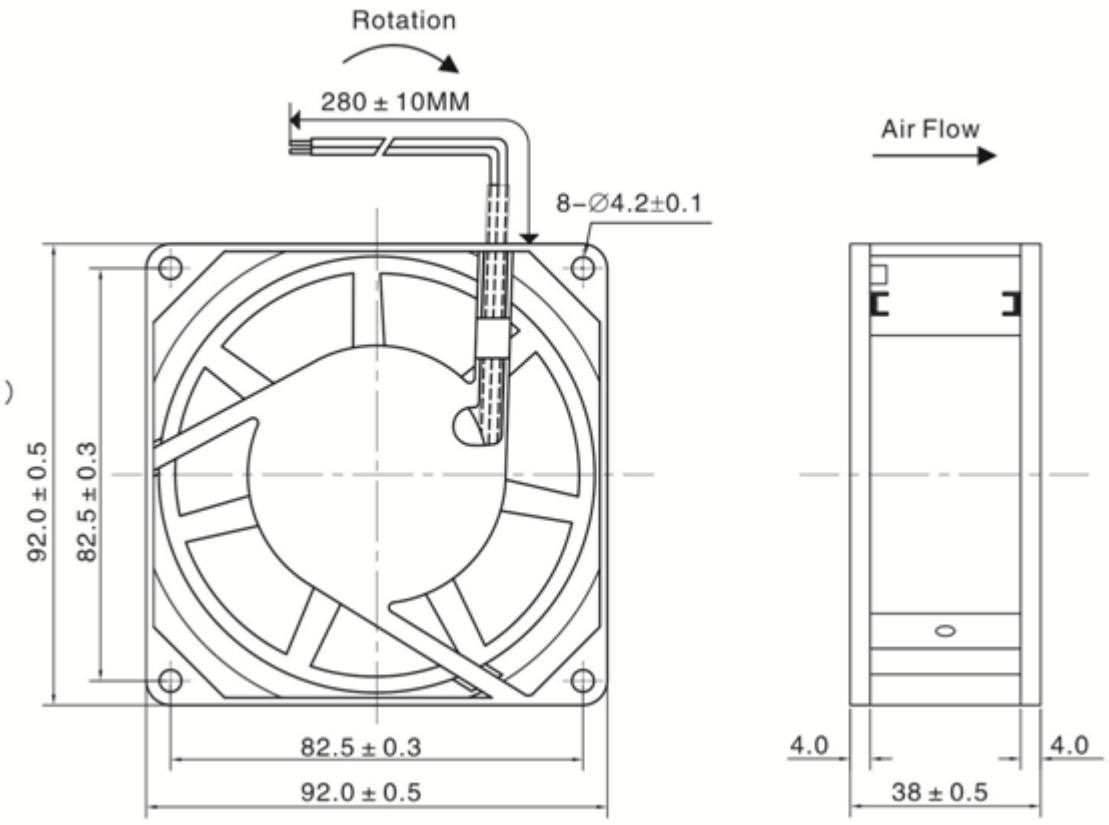

尺寸单位：毫米

DIMENSIONS UNIT:MM

APPROVED DATE	兰东阳	PART NO.	9238HSL2
REVIEWED DATE	张明杰	PAGE	A
PREPARED DATE	张梅连	深圳市福盛电机有限公司	