WENZHOU GANGYUAN ELECTRONICS CO.,LTD

REV	DESCRIPTION	DRW	DATE
A	NEW		

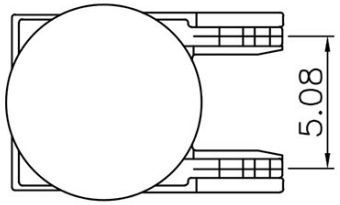

CIRCUIT

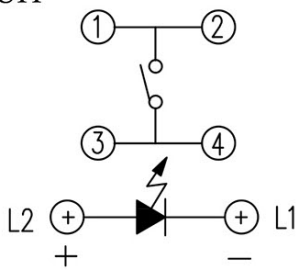

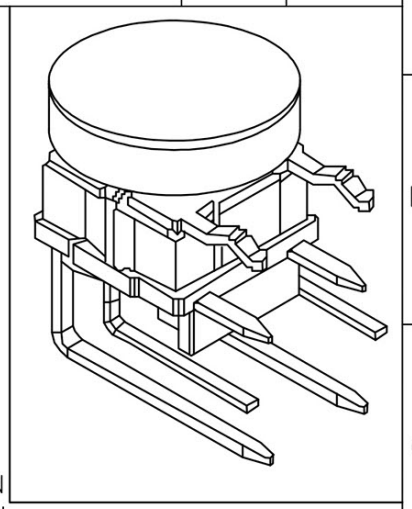

NOTES:
1.RATING: 12VDC 50mA
2.CONTACT RESISTANCE: 100mΩ Max
3.INSULATION RESISTANCE: 100mΩ 250VDC FOR 1MIN
4.DIELECTRIC STRENGTH: 250VAC(50/60Hz) FOR 1MIN
5.LIFE TEST:200,000 CYCLES
6.OPERATION FORCE&TRAVEL: 250±100g/0.25±0.1mm

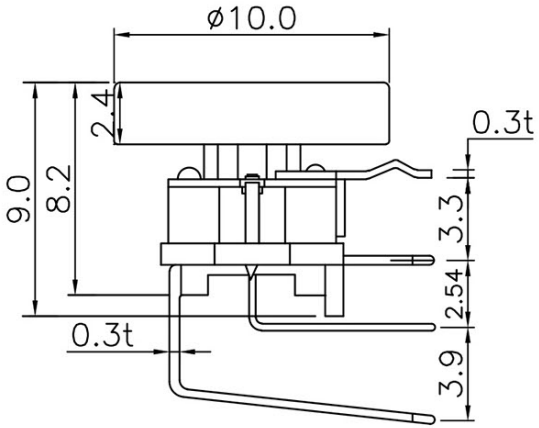

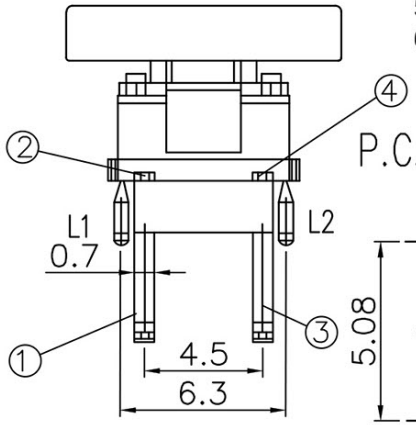

P.C.B Layout

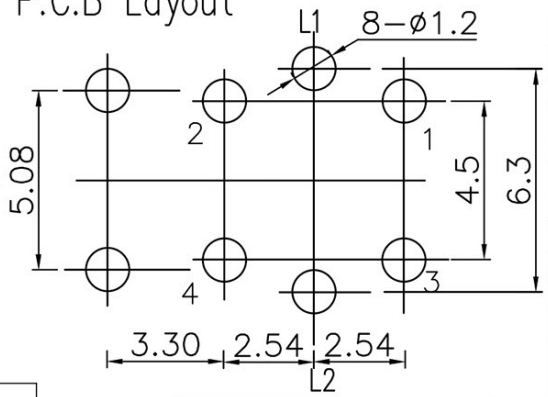

ITEM	PART NAME	MATERIAL
7	LINING	PC或ABS
6	COVER	PC或ABS
5	TERMINAL	Bronze Silver Plated
4	CONTACT	PBS
3	LED	GaAsP/GaP
2	BUTTON	PA66
1	HOUSING	PA66

LED COLOR									
1	2	3	4	5	6	12	13	14	23
Red	Yellow	Green	Blue	White	Pure Green	Red Yellow	Red Green	Red Blue	Yellow Green

TOLERANCE				DRAWN	DATE	TITLE	Right angled type
UNLESS OTHERWISE STATED						MODEL	TS17-0021
X.X	±0.25	∠	±0.5°	CHK'D	DATE	MATL	TX
X.XX	±0.1	UNIT	mm				
REV	A	SCALE	4:1	APPV'D	DATE	FINISH	ST
SIZE	A4	SHEET	1 OF 1				