No	INDEX	page
1	SCOPE	3
2	Case size table	3
3	SPECIFICATIONS	4
4	Nominal capacitance, rated voltage, rated ripple current and case size table	5
5	Frame drawing and materials	6
6	TESTS	7-10
7	Marking	11
8	V- Chip Type Aluminum Electrolytic Capacitors	11

SCOPE

The product specification is adapted to series CDVT V-CHIP Aluminum Electrolytic Capacitors of SUQIAN HUAHONG ELECTRONIC CO., LTD.

Case size table

1. φ4~φ6.3

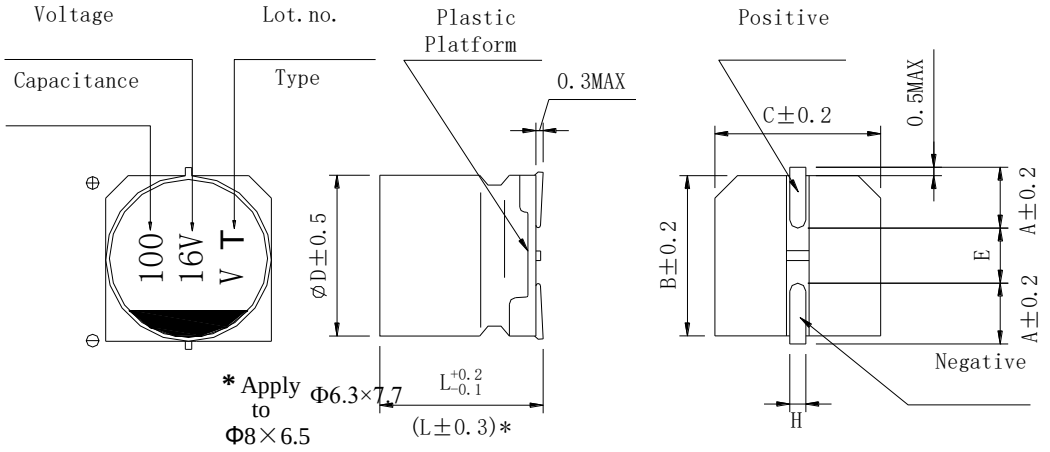

2. φ8~φ10

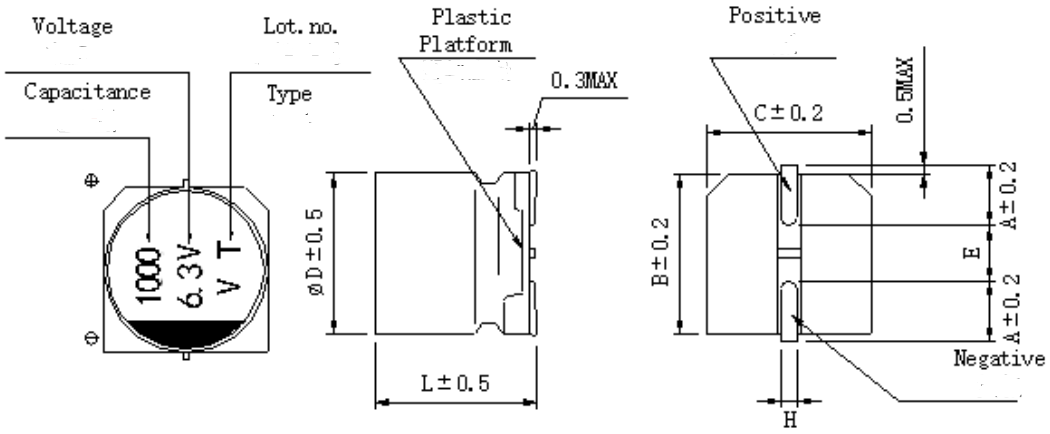

单位:mm

	4 × 5.4	5 × 5.4	6.3 × 5.4	6.3 × 7.7	8×6.5	8× 10.5	10 × 10.5
A	1.8	2.1	2.4	2.4	3.3	2.9	3.2
B	4.3	5.3	6.6	6.6	8.3	8.3	10.3
C	4.3	5.3	6.6	6.6	8.3	8.3	10.3
E	1.0	1.3	2.2	2.2	2.3	3.1	4.5
L	5.4	5.4	5.4	7.7	6.5	10	10
H	0.5 ~ 0.8					0.8 ~ 1.1	

Specifications

Items	Characteristics
Operating Temperature Range	-40℃ ~ 105℃
Rated Voltage Range	4V ~ 100V
Nominal Capacitance Range	0.1 ~ 1500μF
Nominal Capacitance Tolerance	±20%（20℃，120Hz）
Leakage Current	I≤0.01$C_R V_R$ or 3(μA) Take the larger one (apply the rated voltage for 2 minutes） C_R：Nominal capacitance（μF） U_R：Rated voltage（V） I≤0.01$C_R V_R$ or 3(μA)) Whichever is greater(After 2 minutes' application of rated voltage C_R: Nominal Capacitance (μF) U_R: Rated voltages (V)

（tgδ） Dissipation Factor (Max) 20℃, 120Hz										
	U_R (V)	4	6.3	10	16	25	35	50	63	100
	tgδ	0.35	0.28	0.24	0.20	0.16	0.14	0.12	0.12	0.10

Nominal capacitance, rated voltage, rated ripple current and case size table

μF	4		6.3		10		16		25		35		50		63		100	
	D×L mm	I~ Ma	D×L mm	I~ Ma	D×L mm	I~ Ma	D×L mm	I~ Ma	D×L mm	I~ Ma	D×L mm	I~ Ma	D×L mm	I~ Ma	D×L mm	I~ Ma	D×L mm	I~ Ma
0.1													4×5.4	1.0	4×5.4	1.3		
0.22													4×5.4	2.0	4×5.4	2.6		
0.33													4×5.4	2.8	4×5.4	3.2		
0.47													4×5.4	4.0	4×5.4	3.8		
1.0													4×5.4	8.4	4×5.4	5.6		
2.2													4×5.4	13	4×5.4	10		
3.3													4×5.4	17	4×5.4	14	6.3×7.7	28
4.7									4×5.4	16	4×5.4	15	4×5.4	18	4×5.4	19	6.3×7.7	35
													5×5.4	20				
10							4×5.4	16	4×5.4	25	4×5.4	24	5×5.4	30	6.3×5.4	29	6.3×7.7	50
									5×5.4	27	5×5.4	29	6.3×5.4	33				
22			4×5.4	20	4×5.4	30	4×5.4	30	5×5.4	38	5×5.4	39	6.3×5.4	43	6.3×7.7	70	8×10.5	120
					5×5.4	30	5×5.4	37	6.3×5.4	42	6.3×5.4	46						
33	4×5.4	28	4×5.4	34	4×5.4	34	5×5.4	44	5×5.4	46	6.3×5.4	53	6.3×7.7	85	8×10.5	140	10×10.5	190
			5×5.4	37	5×5.4	41	6.3×5.4	49	6.3×5.4	52								
47	4×5.4	33	4×5.4	40	5×5.4	47	5×5.4	52	6.3×5.4	60	6.3×7.7	70	6.3×7.7	90	8×10.5	170		
			5×5.4	45	6.3×5.4	52	6.3×5.4	58	8×6.5	80	8×10.5	170	8×10.5	140				
56	5×5.4	42	5×5.4	46	5×5.4	50	5×5.4	57	6.3×5.4	60	6.3×7.7	80	8×10.5	150	8×10.5	230		
			6.3×5.4	52	6.3×5.4	57	6.3×5.4	63	6.3×7.7	80								
100	5×5.4	56	5×5.4	47	5×5.4	54	6.3×5.4	110	6.3×7.7	130	8×10.5	175	8×10.5	181.	8×10.5	280		
			6.3×5.4	56	6.3×5.4	110			8×10.5	180	10×10.5	310	10×10.5	195	10×10.5	310		
150	6.3×5.4	79	6.3×5.4	71	6.3×7.7	110	6.3×7.7	135	8×10.5	192	8×10.5	214	10×10.5	238				
220	6.3×5.4	96	6.3×5.4	70	6.3×7.7	150	6.3×7.7	150	8×10.5	232	8×10.5	246	10×10.5	289				
			6.3×7.7	95	8×6.5		8×10.5	275	10×10.5	375	10×10.5	375						
330	6.3×7.7	152	6.3×7.7	150	8×10.5	240	8×10.5	270	8×10.5	284	10×10.5	450						
	8×6.5		8×6.5				10×10.5	450	10×10.5	450								
470	6.3×7.7	200	8×10.5	265	8×10.5	290	8×10.5	307	8×10.5	325								
	8×6.5				10×10.5	460	10×10.5	460	10×10.5	490								
680	8×10.5	284	8×10.5	318	10×10.5	490	10×10.5	396										
1000	8×10.5	344	8×10.5	372	10×10.5	374												
			10×10.5	520		520												
1500	10×10.5	347	10×10.5	489														

I~= Rated ripple current (mA) (105℃, 120Hz)

Frame drawing and materials

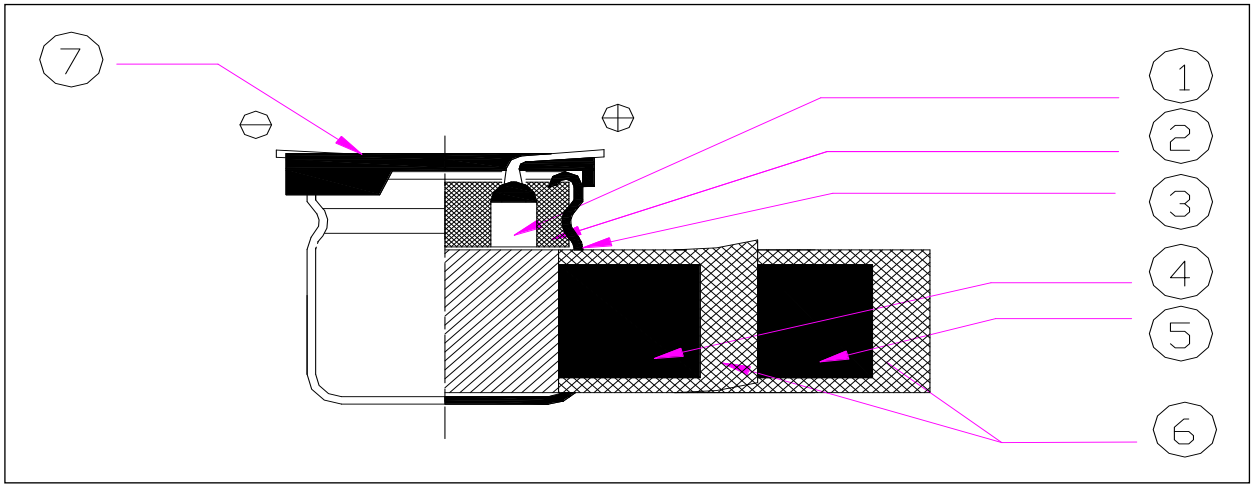

No.	Parts	Material	Main supply Factory
1	Pinout	AL- wire LG3+Tin-plating of copper cover steel	QUANYONG ELECTRONIC CO., LTD.
2	Rubber stopper	IIR rubber	JCC JCC, Co. (KOREA)
3	PE PE- CASE	99.5% AL –99.5%	DN DN CO.(KOREA)
4	AL – foil(+)	Formed AL 99.98% or 99.98%	JCC Co. (JAPAN)
5	AL – foil(-)	Etched AL 99.7%	JCC Co. (KOREA)
6	Separstor paper	Electrolytic Capacitor paper	NKK Co.(Japan)
7	BASE	PPS	JS Co.(KOREA)

Tests

<table>
<tr><td>1</td><td>(SERIES)</td><td colspan="2">CDVT （CDVT SERIES）</td></tr>
<tr><td>2</td><td>(rated voltage)</td><td colspan="2">4~100V</td></tr>
<tr><td>3</td><td>Operating temperature range operating</td><td colspan="2">operating temperature range is the range of ambient temperature at which the capacitor can be operated continuously at rated voltage
SPEC:-40~+105℃</td></tr>
<tr><td rowspan="5">4</td><td rowspan="5">capacitance</td><td colspan="2">measuring circuit equivalent series circuit</td></tr>
<tr><td>20℃</td><td>measuring temperature</td></tr>
<tr><td>120HZ</td><td>measuring frequency</td></tr>
<tr><td>0.5Vrms</td><td>measuring voltage</td></tr>
<tr><td>:±20% MAX</td><td>Nominal Capacitance Tolerance:±20% MAX</td></tr>
<tr><td>5</td><td>tangent of the loss angle</td><td colspan="2">Measurement should be made under the same conditions as those given for the measurement of capacitance
SPEC：
<table>
<tr><td rowspan="2">（tgδ）</td><td>U_R (V)</td><td>4</td><td>6.3</td><td>10</td><td>16</td><td>25</td><td>35</td><td>50</td><td>63</td><td>100</td></tr>
<tr><td>tgδ</td><td>0.35</td><td>0.28</td><td>0.24</td><td>0.20</td><td>0.16</td><td>0.14</td><td>0.12</td><td>0.12</td><td>0.10</td></tr>
</table></td></tr>
<tr><td>6</td><td>leakage current</td><td colspan="2">the rated voltage shall be applied across the capacitor and its protective resistor which shall be 1000±100Ω.The leakage current shall be then measured after an electrifications period of (A)min. The leakage current shall be calculated by the following equation
greater(Take the larger one）（20℃，2 minute）
SPEC: The following specifications shall be satisfied when the rated voltage is applied for the required time.</td></tr>
<tr><td>7</td><td>Maximum permissible ripple current</td><td colspan="2">The maximum sinusoidal alternating current of a frequency specified below, at which the capacitor can be operated continuously. This requirement shall be satisfied even after the measurement of clause 16(electrical endurance)
Where(DC voltage +peak ripple voltage)≤rated voltage</td></tr>
</table>

<table>
<tr>
<td>8</td>
<td>Characteristics of temperature</td>
<td>
<table>
<tr><th>step</th><th>temperature</th><th>Duration</th></tr>
<tr><td>1</td><td>20±2℃</td><td></td></tr>
<tr><td>2</td><td>minimum operating temperature</td><td>2 hours</td></tr>
<tr><td>3</td><td>20±2℃</td><td>15 min</td></tr>
<tr><td>4</td><td>maximum operating temperature</td><td>2 hours</td></tr>
</table>
Step1：Capacitance, tangent of the loss angle impedance shall be measured.
Step2：After the capacitor being stored for 2hours, Capacitance, tangent of the loss angle and impedance shall be measured.
Step3：The capacitor being stored fro 15min at20±2℃
Step4：After the capacitor being stored for 2hours, capacitance and leakage current shall be measured
<table>
<tr><td>rated voltage</td><td>4~6.3</td><td>10</td><td>16</td><td>25</td><td>35~100</td></tr>
<tr><td>Z-(-25℃/Z20℃)</td><td>4</td><td>3</td><td>2</td><td>2</td><td>2</td></tr>
<tr><td>Z-(-40℃/Z20℃)</td><td>8</td><td>6</td><td>4</td><td>4</td><td>3</td></tr>
</table>
</td>
</tr>
<tr>
<td>9</td>
<td>Surge test</td>
<td>
The capacitor shall be subjected to 1000cycles at a temperature specified below, each consisting of a charge period of 30±5sec, followed by a discharge period of approx. 5min30sec. And the capacitor shall be stored under standard conditions thermal to obtain stability,after which measurements shall be made.
measurement circuit(Test circuit diagram）
<table>
<tr>
<td rowspan="3">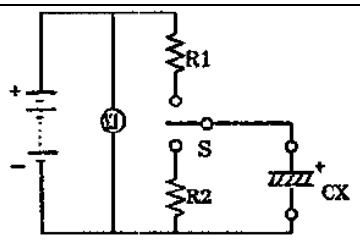
</td>
<td>VS: Surge voltage</td>
<td>V1: DC voltmeter</td>
</tr>
<tr>
<td>R1:（1KΩ）
Protective series resistor</td>
<td>R2:
Discharge resistor</td>
</tr>
<tr>
<td>CX: Test capacitor</td>
<td>S: Switch</td>
</tr>
</table>
SPEC: 1) △C/C≤15%
2) tg δ ＜Specified value
3）Voltage
<table>
<tr><td>RATED VOLTAGE(V_{DC})</td><td>4</td><td>6.3</td><td>10</td><td>16</td><td>25</td><td>35</td><td>50</td><td>63</td><td>100</td></tr>
<tr><td>SURGE VOLTAGE(V_{DC})</td><td>5</td><td>8</td><td>13</td><td>20</td><td>32</td><td>44</td><td>63</td><td>79</td><td>125</td></tr>
</table>
</td>
</tr>
</table>

<table>
<tr><td>10</td><td>Terminal strength</td><td>1) tensile
<table>
<tr><th>d(mm)</th><th>[N]</th><th>Duration time</th></tr>
<tr><td>0.3<d≤0.5</td><td>5</td><td rowspan="3">10±2sec</td></tr>
<tr><td>0.5<d≤0.8</td><td>10</td></tr>
<tr><td>0.8<d≤1.25</td><td>20</td></tr>
</table>
2）Bending
The terminal shall be subjected to 1 bend in each direction to give a total 2 bends.
<table>
<tr><th>d(mm)</th><th>[N]</th></tr>
<tr><td>0.3<d≤0.5</td><td>2.5 (0.25KG)</td></tr>
<tr><td>0.5<d≤0.8</td><td>5.0 (0.51KG)</td></tr>
<tr><td>0.8<d≤1.25</td><td>10.0(1.0KG)</td></tr>
</table>
SPEC: No breaking and loosening of terminal</td></tr>
<tr><td>11</td><td>solderability</td><td>Solder：H60A. H60S or H63A
Solder temperature：245±2℃
Immersion time：3±0.5sec
Immersion depth：2mm
Flux：25％ by weight of rosin in ethanol
SPEC:1) 3/4 of the circumference of the surface up to the immersed shall be covered with new solder.</td></tr>
<tr><td>12</td><td>Resistance to soldering heat</td><td>Solder：H60A. H60S or H63A
Solder temperature）：260±5℃ or 350±10℃
Immersion time：10±1sec or 3.5±0.5sec）
Thickness of heat shunt:1.6mm）：1.6mm
SPEC: 1) Change in capacitance: ±10% Within±10% of the initial value
2）tangent of the loss angle: The initial specified value or less
3）leakage current： The initial specified value or less</td></tr>
<tr><td>13</td><td>Vibration</td><td>Only endurance conditioning by sweeping shall be made. The entire frequency range, from 10 to 55Hz and return to 10Hz, shall be transversed in 1min. Amplitude(total excursion)1.5mm, This motion shall be applied for a period of 2hours in each of 3 muturally perpendicular directions(a total of 6 hours)
SPEC: 1) change in capacitance）: ±5% ±5%of the initial value）
2）No visible damage</td></tr>
</table>

14	Damp heat	the capacitor shall be stored at a temperature of 40±2℃ and relative huidity of 90 to 95% for 240±8 hours。And then the capacitor shall be subjected to standard atmospheric conditions for 1 to 2 hours, after which measurements shall be made SPEC: 1) change in capacitance：±15% within ±15%of the initial value； 2) tangent of loss angle： The initial specified value or less； 3) leakage current： The initial specified value or less
15	shelf life	The capacitor shall be stored at 105℃ temperature specified below for 500hours.During which time no voltage shall be applied. And then the capacitor shall be sujected to standard atmospheic conditions for 1 to2hours, after which measurements shall be made, Prior to the measurement of leakage current, following conditioning may be made. SPEC: 1) change in capacitance：±25%（φ4~φ6.3）within ±25%of the initial value；±20% φ8、φ10）within ±20%of the initial value； 2) tangent of loss angle：±200% within ±200%of the initial value； 3）leakage current： The initial specified value or less
16	load life	The rated voltage shall be applied continuously to the capacitor at maximum operating temperature 105±2℃ for 1000 hours. And then the capacitor shall be subjected to standard atmospheric conditions for 1to 2hours, after which measurement shall be made. SPEC: 1) change in capacitance: ±30% within 30% of the initial value；±20%内（φ8 φ10）within ±20%of the initial value； 2) tangent of loss angle：±200%（φ4~φ6.3）within ±300%of the initial value；±200%（φ8 和 φ10）within ±200%of the initial value； 3）leakage current： The initial specified value or less

Information: The mark of “VT” is the special mark of CDVT for SMD Type of SUQIAN HUAHONG ELECTRONIC CO., LTD.

V- Chip Type Aluminum Electrolytic Capacitors

Carrier tape

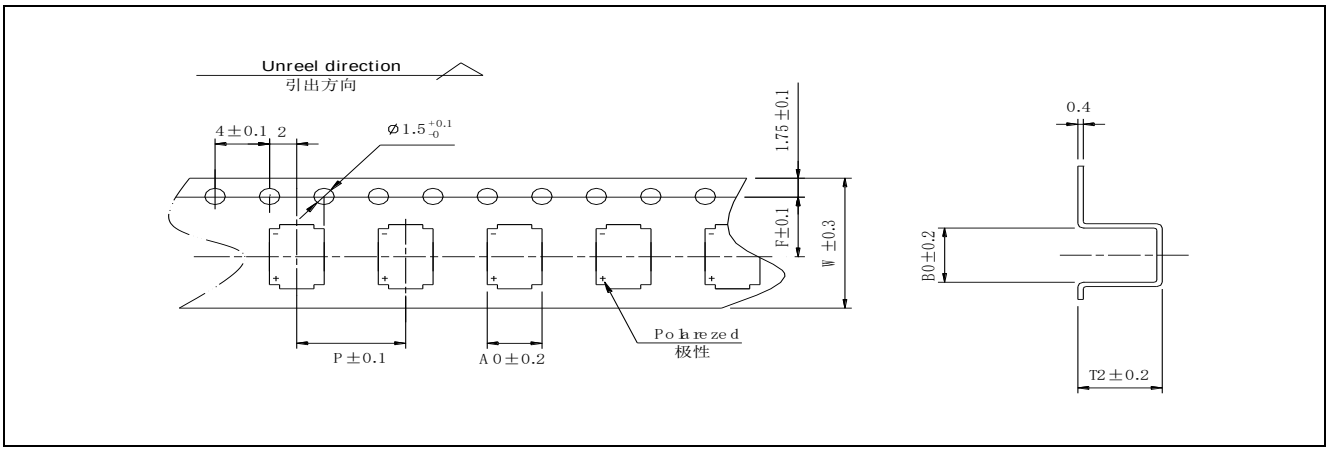

ΦD×L	4×5.4	5×5.4	6.3×5.4	6.3×7.7	8×6.5	8×10.5	10×10.5
W	12.0	12.0	16.0	16.1	16.1	24.0	24.0
P	8.0	12.0	12.0	12.0	12.0	16.0	16.0
F	5.5	5.5	7.5	7.5	7.5	11.5	11.5
A_0	5.0	6.0	7.0	7.0	8.7	8.7	10.7
B_0	5.0	6.0	7.0	7.0	8.7	8.7	10.7
T_2	5.8	5.8	5.8	8.2	6.8	11.0	11.0

■ Reel

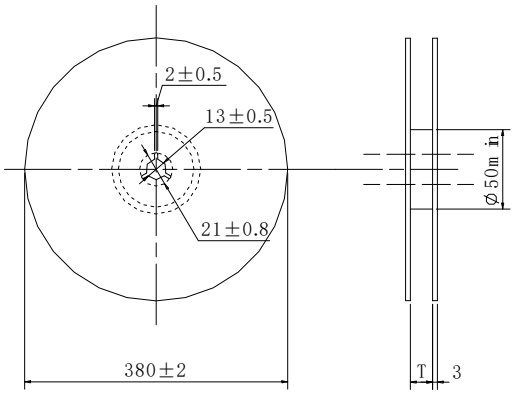

Package quantity

ΦD	Quantity / Reel
4	2000pcs
5、6.3	1000pcs
6.3×7.7	1000pcs
8×6.5	1000pcs
8×10.5、10×10.5	500pcs

（mm）

ΦD	4	5	6.3 8×6.5	8×10.5	10×10.5
T	14	14	18	26	26