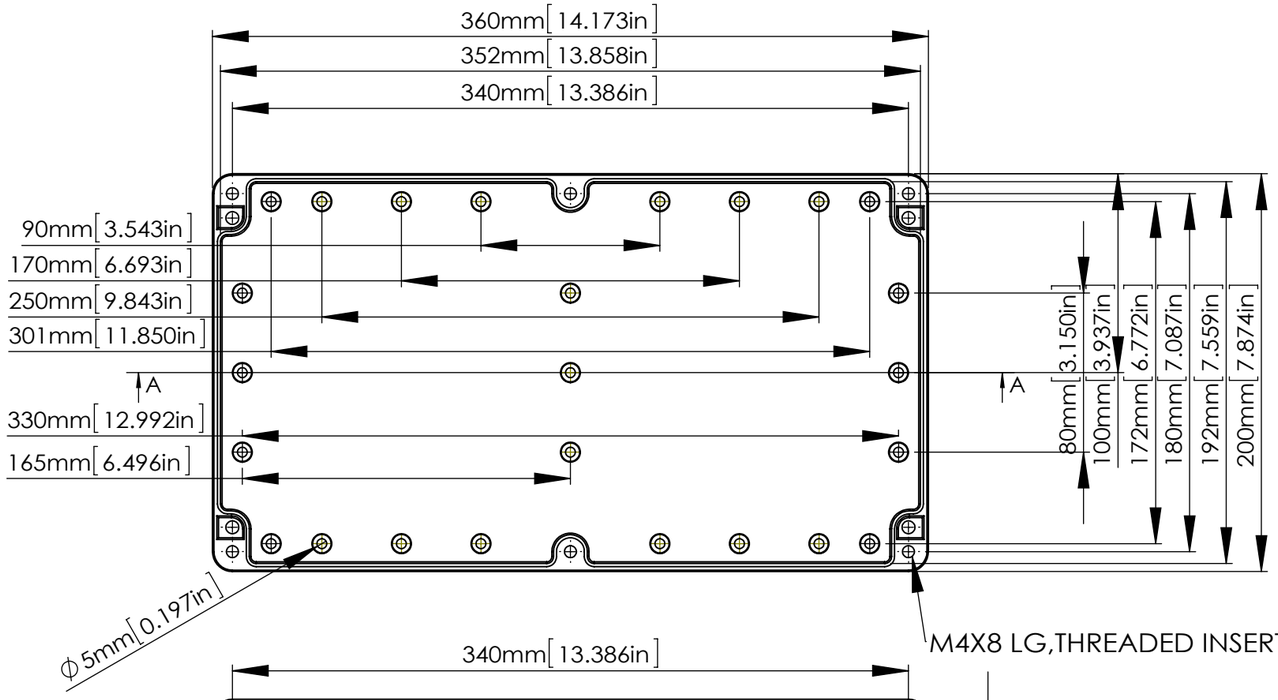


M4X8 LG,THREADED INSERT(6) PLACES.

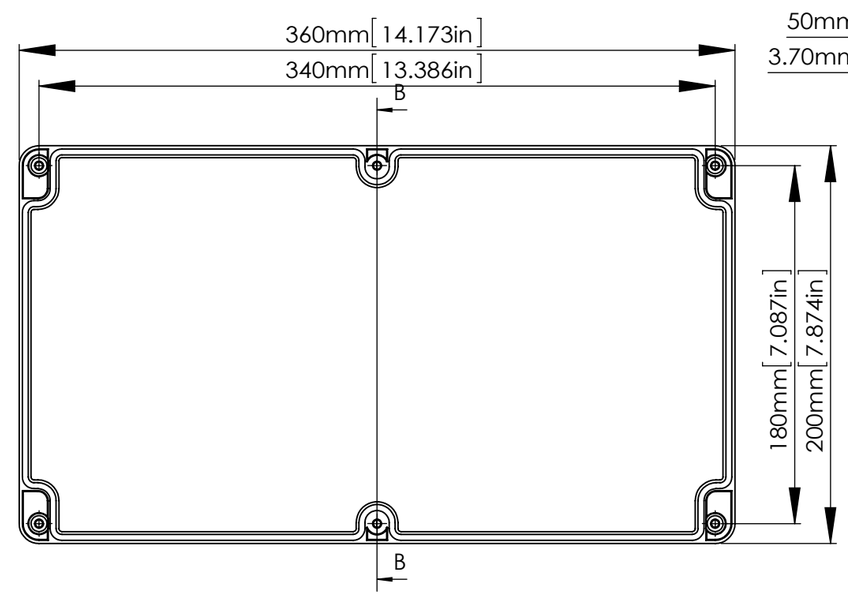


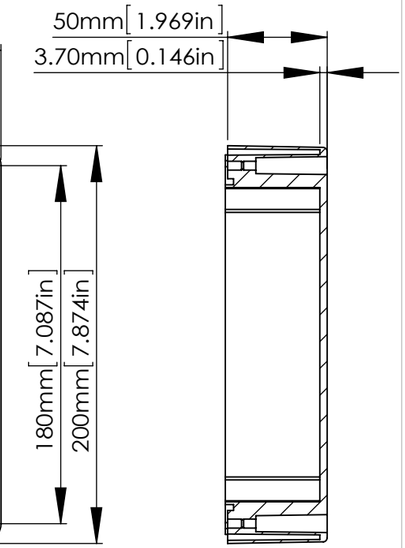


SECTION B-B
SCALE 1 : 3

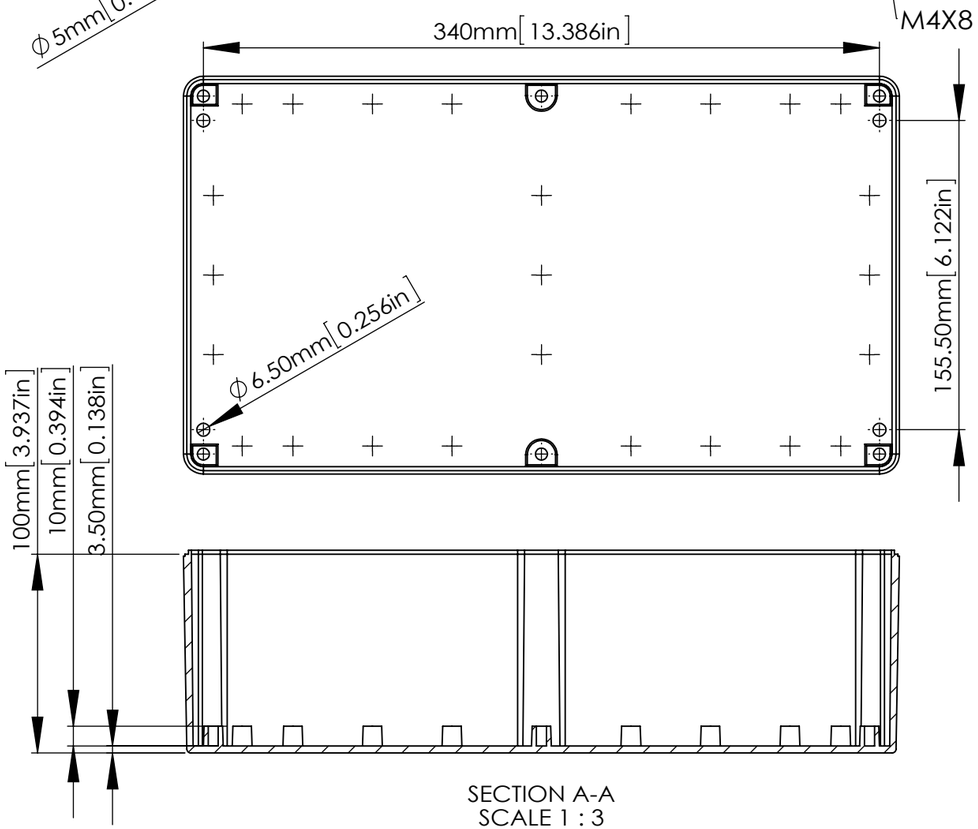


SECTION A-A
SCALE 1 : 3

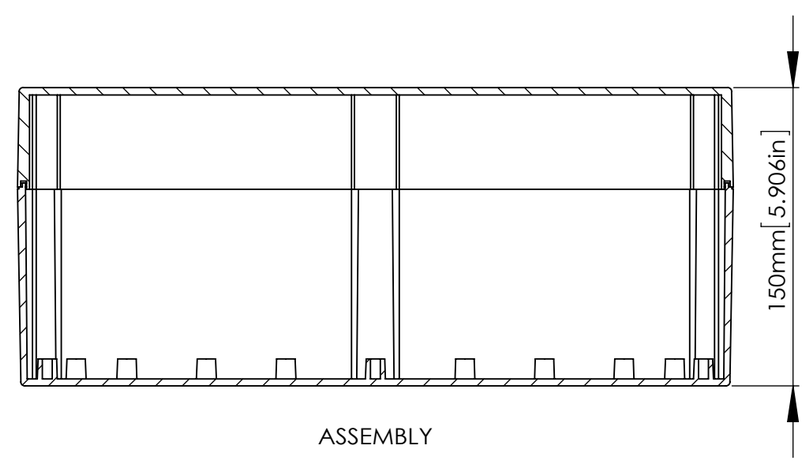


ASSEMBLY

| According to ISO 2768-m | |
|---|---|
| Measuring DIM=L | Tolerances |
| 0.5<L<=3.0mm | ±0.1mm |
| 3.0<L<=6.0 mm | ±0.1mm |
| 6.0<L<=30.0 mm | ±0.2mm |
| 30.0<L<=120.0 mm | ±0.3mm |
| 120.0<L<=400.0 mm | ±0.5mm |
| 400.0<L<=1000.0 mm | ±0.8mm |

| 宣又實業有限公司 GAINTA INDUSTRIES LTD. | 繪圖 DRA'D BY | 日期 DATE | 材質 MATE. | 圖名TITLE: | 圖號DWG NO: | 版次REVISED: |
|---|---|---|---|---|---|---|
| | JACKY | 2021/11/25 | PC/ABS | G2058;G3039 | | E |