◆ **Technical Data:**

Model:SR-22DC-DA-R

GENERAL SPECIFICATIONS



Timers : 512

Counters: 512

Function Blocks: 512

Operation temp.: -20℃~+55℃

Storage: -40℃~+70℃

Protection: IP20(Non-waterproof)

RTC accuracy: MAX ±2S/day

RTC Backup at 25 °C: 20 days

Program and settings Backup:10 years

Data Power-off retentivity: 10 years

Dimensions : 133*90*60 (Unit, mm）

Certificate : CE

Installation : 35mm-DIN rail or screw for installation

Modify parameters via keypad LCD: Yes

Supported programming language: FBD & Ladder

Expansion capacity: 3 modules (SR-E)

Password protection: 4-digit number password protection or disable program upload function

Communication interface: 2 RS485 port (COM1 external -- SR-RS485, COM2 built-in), 1Ethernet port(10M)

Communication protocol: Modbus RTU, Modbus TCP

Technical Index

Power supply:	
Nominal voltage	DC12-24V /AC24V
Operating limits	DC10.8-28.8V AC 21.6-26.4V
Immunity from micro power cuts	Typ.5 ms
Max. Startup current	Max. 0.4A
Max. absorbed power	0.35A (10.8V dc); 0.15A (28.8V dc); 0.3A (24V ac)
Protection against polarity inversions	Yes
Input parameters:	
Input No	14 (I1-IE)
Digital input	14 (I1-IE)
Analogue input	6 (I1-I6) (0...10V DC)
Digital inputs (I7-IE)	
Input voltage	DC 0-28.8V AC 0-24V
Input signal0	< 5V DC; <1 mA

	< 3V AC
Input signal1	> 8V DC; >1.7 mA > 6V AC
Input current	2.1mA @ 10.8V dc 2.3mA @ 12.0 V dc 4.6 mA @ 24 V dc 5.5 mA @ 28.8 V dc 4.76 mA @ 24 V ac
Response time	DC12-24V 0 to 1: Typ. 3ms; 1 to 0: Typ. 3ms AC24V 0 to 1: Typ. 72ms; 1 to 0: Typ. 72ms
Maximum counting frequency	65k Hz(I9—IC)
Sensor type	Contact or 3-wire PNP
Input type	Resistive
Isolation between power supply and inputs	None
Isolation between inputs	None
Inputs used as digital inputs (I1-I6)	
Input voltage	DC 0-28.8V AC 0-24V
Input signal0	< 5V DC; <0.09 mA < 3V AC
Input signal1	> 8V DC; >0.15mA > 5V AC
Input current	0.16mA @ 10.8V dc 0.18mA @ 12.0 V dc 0.49mA @ 24 V dc 0.62mA @ 28.8 V dc 0.58 mA @ 24 V ac
Response time	DC12-24V 0 to 1： Typ. 5 ms; 1 to 0： Typ. 5 ms AC24V 0 to 1：Typ. 40ms 1 to 0：Typ. 40ms
Maximum counting frequency	Typ.：4 HZ
Sensor type	Contact or 3-wire PNP
Input type	Resistive
Isolation between power supply and inputs	None
Isolation between inputs	None
Inputs used as analog inputs (I1-I6)	
Measurement range	DC 0---10V
Input impedance	Min, 24KΩ; Max. 72KΩ
Input voltage	28.8 V DC max
Resolution	10bit ,0.01V
Accuracy at 25 °C	± (Max.0.2)V

Isolation between analog channel and power supply	None
Cable length	10 m max. shielded and twisted
Output parameters:	
Output No.	8 (Q1-Q8)
Output type	Relay output
Safety certified load (resistive)	10A,250V AC
Min switching load	6V 1A
Electrical endurance (360ops/h)	10^5 (at room temperature)
Mechanical endurance 10,800ops/h	10^7 (at room temperature)
Response time	Operate Time: 15 mSec. Max. Release Time: 10 mSec. Max.
Built-in protections	Against short-circuits: None Against over-voltages and overloads: None
Switch frequency:	
Mechanism	10Hz
Resistor/light load	2Hz
Sensitive load	0.5Hz
Other parameters:	
Weight	250g

Installation Dimensions & Wiring Diagram

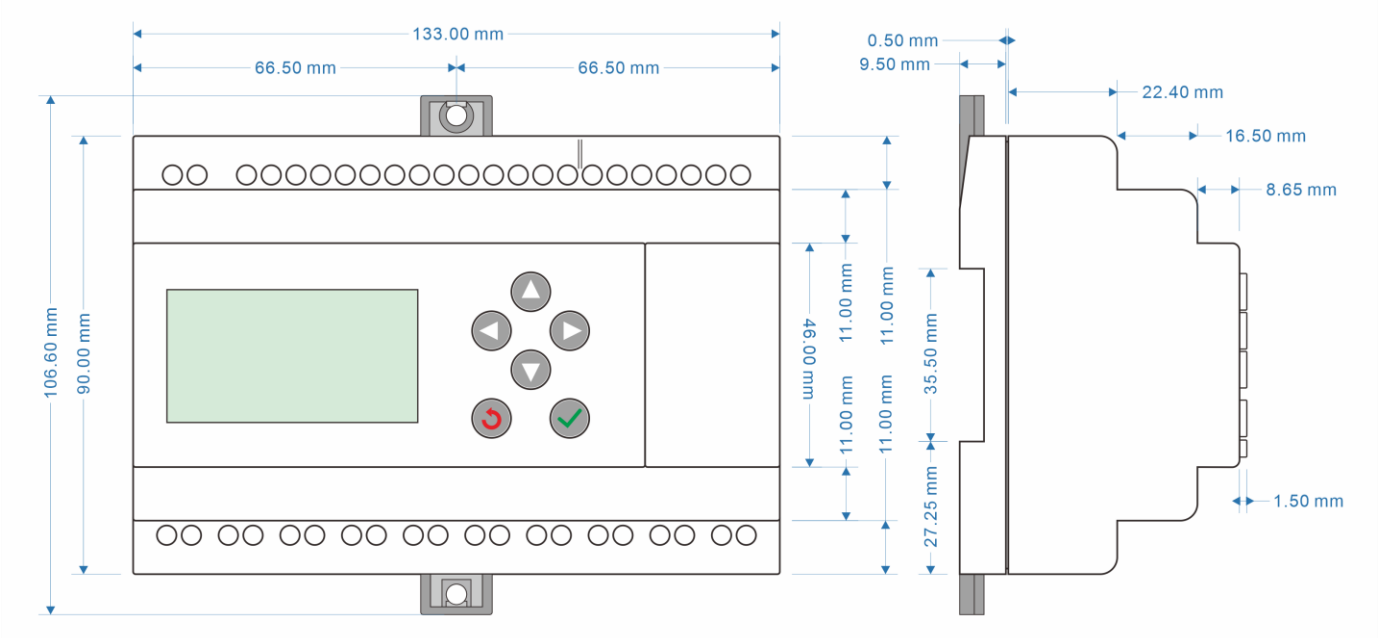

Digital Input / Output

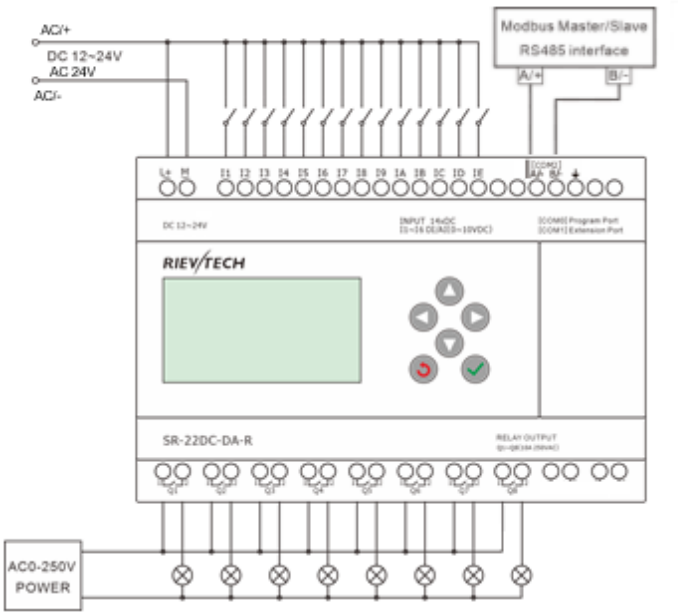

0~10V Analog Input

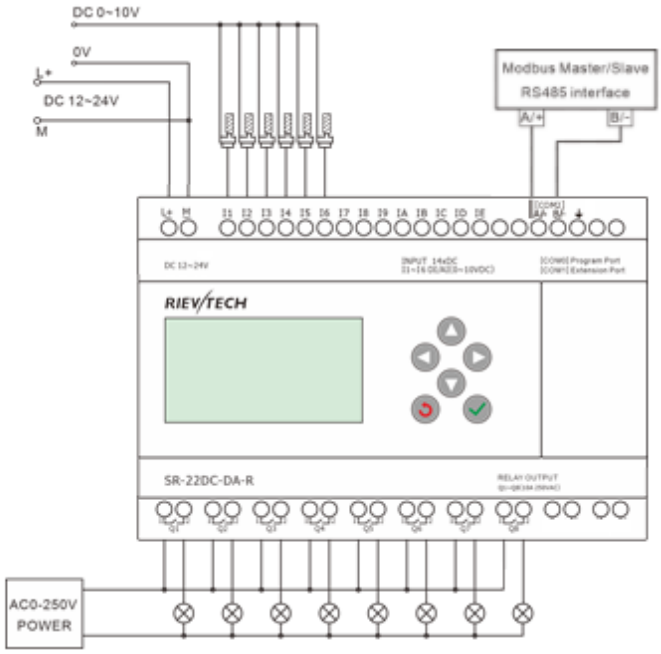

SYSTEM	Operating System requirements	Windows /2000/XP/WIN7/WIN8	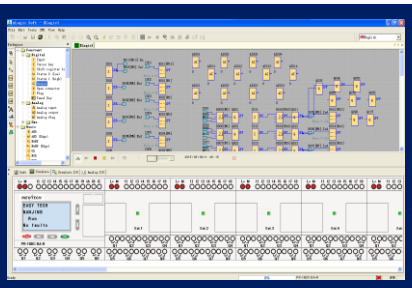	
	Programming languages	Function block		
	Program Memory	512		
	Execution Speed	<0.1ms per function		
	LCD Display	4 lines x 16 characters		
	Functions	Up to 70 function blocks		
BASIC	Timers			a.On-delay; b.Off-delay etc. Up to 12 kind Timers
	Maximum Number	512		
	Timing Ranges	10ms--99 h59m		
	Counters			a.Up/down Counter b.Hours Counter c.Frequency Threshold Trigger
	Maximum Number	512		
	Highest Count	99999999		
	Resolution	1		
	RTC			a.Weekly Timer b.Yearly Timer
	Number available	512		
	Resolution	1 min		
	Time span available	Week/year-month-day-hour-min		
	Flags			a.Digital Flag b.Analog Flag
	Digital flags	256		
	Analog flags	256		
	PI Functions			a.PI Controller
	Number available	30		
	Parameter Ranges	1-32767		
	Analog Math			a.Analog Math b.Analog Math Error detection
	Number available	512		
	Function	ADD, Subtract,Multiply, Divide		
	Analog Ramp Function			a. Analog Ramp
	Number available	55		
	Compare Function			a.Analog compactor
	Number available	512		b.Comparison of 2 values
Special Functions	HMI Screens			a.Message texts
	Number available	16		
	Display/Edit	Preset Current value and Free text		
	Communication Functions			Modbus read write
	Number available	512(Only CPU works as Master need this block, slave does not need)		
	Word/bit data Conversion	Analog watchdog	Analog filter	RS latch relay
	Boolean function	Stop watch	Pulse Relay	Average value
	Astronomical clock			

Note: 1.Not all program functions are listed in this table i.e. AND,NAND,OR,NOT,NOR,XOR,SHIFT REGISTER,DATA LATCHING RELAY, COMPORT STATUS etc.