REV.	DESCRIPTION	DRAWN	CHECKED	APPROVED
A	NEW RELEASE	LJC 06/18/05'		

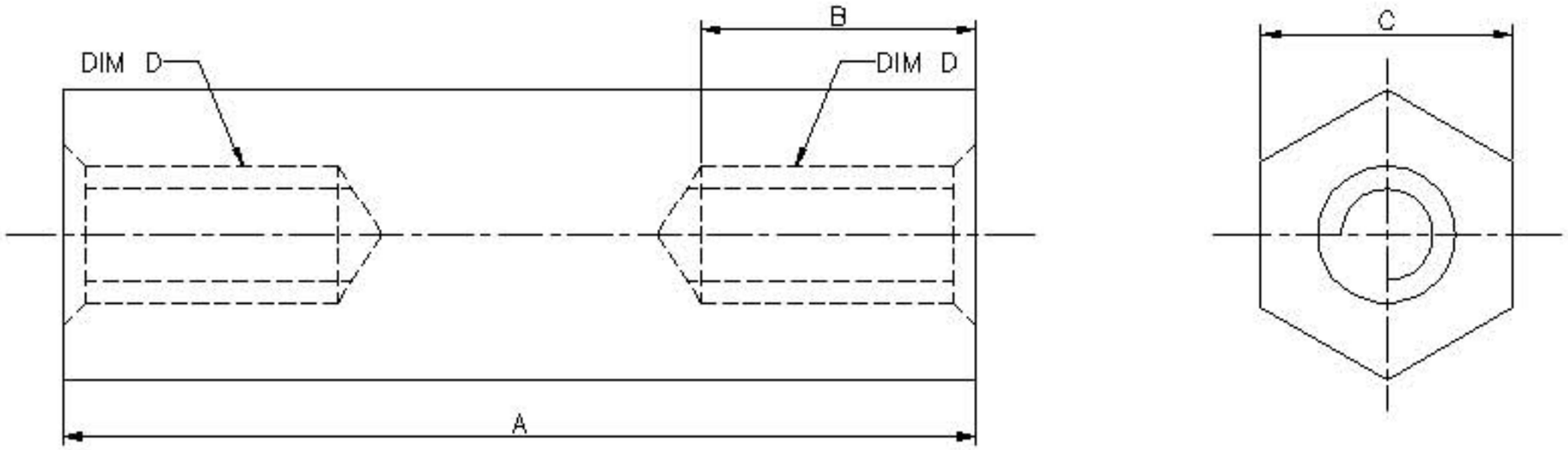

NOTES:

1.Materials: Copper alloy.
2:Plating: Nickel plating.
3:Part number code:

H – LXXXX – XXXX –5 –03 – 2N

- 03: Thread type: DIM D
  03: M3.0
- 5: DIM C:
  5: ø5.5mm
- XXXX: DIM B:
  0600: 6.0mm
- LXXXX: DIM A:
  0600: 6.0mm
  4000: 40.0mm

GENERAL TOLERANCE		ANGLE TOLERANCE	
X.	±0.30	X.	±2°
.X	±0.20	.X	±1°
.XX	±0.15	.XX	±0.5°

DRAWING TYPE	CUSTOMER DRAWING		
SCALE	1:1	SHEET	1 OF 1
DRAWING NO.	H–LXXXX–XXXX–5–03–2N		

PROJECTION		TITLE	Screws
UNITS	mm		
SHEET SIZE	A4	SERIES	Hardwares SERIES

晨翔电子有限公司

CONNFLY CONNFLY ELECTRONIC CO. LTD